International Journal of Applied Engineering Research ISSN 0973-4562 Volume 13, Number 5 (2018) pp. 75-78

Design of Material Handling System for Kit Packing Machine

P. S. Garudkar[1]
[1]*Assistant Professor, Department of Mechanical Engineering, SITRC Nashik-422213*

Ganesh Yande[2*], Shubham Wadekar[2]
Rahul Sanap[2], Mayur Nikam[2]
[2*]*BE Mechanical students, SITRC Nashik – 422213*

Abstract
This paper includes the design of belt conveyor system where the moving roller of the conveyor is powered by a pneumatic cylinder. Pneumatic cylinder will starts reciprocating and by using rack and pinion mechanism the reciprocating motion converts into the rotary motion. These rotary motions further transmit using freewheel-sprocket chain drive to the drive pulley of conveyor. Due to power given by cylinder piston, rack -pinion and freewheel-sprocket chain drives the shaft of pulley starts rotating unidirectional. Hence our belt conveyor is also starts rolling.

Keywords: Belt Conveyor, Pneumatic Cylinder, Rack, Pinion

Introduction
Pneumatic systems are defined as fluid power. They use air as fluid to transmit power. Pneumatic systems are used extensively in industry are commonly powered by compressed air or compressed inert gases. Air is available free and abundant amount. The fluid source is cleaner than other fluid. Also pneumatic actuators can achieve relatively high forces compared to electromechanical solutions. Force is proportional to pressure and area of the piston. Pneumatics also cleaner that hydraulic systems and there is correspondingly no risk of leakage of oil. Using pneumatic controlling of a relatively simple pneumatic system is cheaper and simpler. The belt conveyor is powered by using stepper motor. They are expensive. Also servo motor requires electricity and other electronic devices for operation. Hence by using pneumatic cylinder and rack pinion mechanism the motion get control and the electronic device are reduced.

Literature Review
The research work carried out on the pneumatic conveying system in the last decade considering that Pneumatic Conveying System basically oriented with materials which are bulk by nature, essentially for powdered form, granules, and other dry bulk materials. Pneumatic systems are powered by pressure consistency through a piped structure for transfer of resources. The Pneumatic conveyors have a prime importance in plants and other source of industries in comparison to the traditional conveying platforms. They are adaptable with bends giving more flexibility to occupy less space hence conservative, also having minimal source for conveying helps in less maintenance than a multisource mechanic conveying. The belt conveyor system is operated by reciprocating the double acting cylinder which is controlled by solenoid operated 5/2 way DC valve which is actuated by ON/OFF relay control system. Here by using rack and pinion mechanism the linear motion is transfer into the reciprocating motion. Belt conveyor is the simple of all types of conveyor. Belt conveyor is cheaper than other type. They are used to transport bulk material with high load carrying capacity. Belt conveyor is also used to transport material over long distance. There are many parameters that affect the capacity of belt conveyor.

Pneumatically Operated Belt Conveyor System
The pneumatic conveyor is a new design to replace conventional roller conveyor. Conventional roller conveyor uses motor drive and gives continuous motion. But in pneumatic conveyor system we are desired to achieve intermediate traverse of conveyor belt so as to achieve step by step feed with the help of pneumatic cylinder. In this paper a model is prepared where belt conveyor is placed on rollers. The shaft of one of the roller is coupled to sprocket and sprocket is rotated through chain drive by using freewheel and freewheel is rotated by using pinion and pinion rotated by using rack. The rack is connected to pneumatic cylinder and is actuated by solenoid valve. So the intermediate rotation is achieved due to reciprocation of the pneumatic cylinder.

Components and Working Principle
1. Belt conveyor assembly
2. Rack and pinion Mechanism
3. Sprocket chain mechanism
4. Pneumatic cylinder with solenoid valve
5. Control Unit

The moving roller of the conveyor is powered by a pneumatic cylinder. Pneumatic cylinder will starts reciprocating and by using rack and pinion mechanism the reciprocating motion converts into the rotary motion. These rotary motions further transmit using freewheel-sprocket chain drive to the drive pulley of conveyor. Due to power given by cylinder piston, rack -pinion and freewheel-sprocket chain drives the shaft of pulley starts rotating unidirectional. Hence our belt conveyor is also starts rolling.

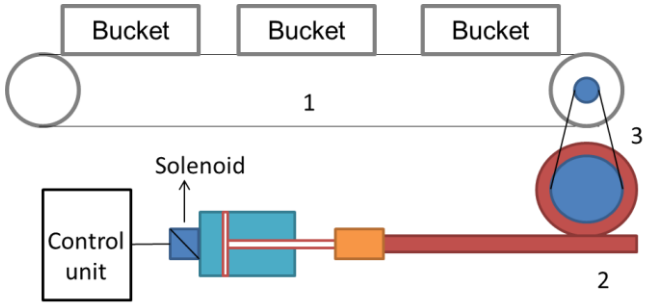

Figure 1: Working principle of pneumatically operated belt conveyor system

Methodology

Design of Belt Conveyor System: in this step the total power required to drive belt conveyor according to the given industrial requirement also the dimensions of pulley, thickness, width of belt, length of belt etc.

Design of Rack And Pinion Mechanism: To calculate the dimension of rack and pinion according to strength basis. Here is to find out thickness of gear tooth, width of rack, diameter of pinion etc.

Design of Chain and Sprocket Mechanism: To design the sprocket and chain according to power transmission to drive pulley. Here is to find numbers of teeth on sprocket and no. of links to drive chain.

Design of Shaft for pinion and Sprocket: To design the shaft by using torque acting on shaft.

Controlling of Pneumatic Cylinder: by using solenoid valve and 5/2 dcv to control pneumatic cylinder.

Design Calculations

Design of belt Conveyor

Assumption,
Belt speed = 0.132 m/s
Belt width = 200 mm
Friction Factor =0.02
Surcharge factor =c=0.09
Centre distance =800 mm
Angle of lap =180
Material = Rubber

Calculation of standard width [5]

$$m = g\,g$$

Calculation minimum Diameter of roller [5]

$$Dmin = K1 \times K2 \times Zp$$

Calculation of length of belt [5]

$$L = 2c + \frac{\pi}{2(D+d)} + \frac{(D-d)^2}{4c}$$

Calculation for Power required [5]

$$\frac{Ftight}{Fslack} = e^{\mu\theta}$$

$$Power = (Ftight - Fslack) \times \frac{V}{1000}$$

Table 1: Specifications of Conveyor Belt

Length of belt	2000 mm
Width of belt	200 mm
Length of each bucket	200 mm
Width of each bucket	150 mm
Total No. of Buckets	10
packing time per pouch	14 sec

1. Calculation for force of pneumatic cylinder:
   To calculate force, [5]

$$F = p\pi\frac{(D^2-d^2)}{4}$$

Table 2: Specification Pneumatic Cylinder

Operating pressure (P)	4 bar
Stroke (S)	100 mm
Piston rod diameter (d)	20 mm
Bore diameter (D)	50 mm

2. Selection of rack and pinion mechanism
   Buckingham's dynamic load equation [5]

$$F_d = F_t + \left[\frac{0.164\,V_m\,[(c]_b + F_t)}{0.164\,V_m + 1.485\sqrt{(c_b + t)}}\right]$$

Table 3: Properties of Material of Rack And Pinion

Properties	**Pinion**	**rack**
Designation	C45	C35 MN75
% C	0.40-0.50	0.30 – 0.40
% MN	0.60-0.90	0.60 - 0.90
Tensile Strength (kgf/cm^2)	63	55
Yield stress (kgf/cm^2)	36	32
Brinell Hardness BHN	229	223
Bending stress (kgf/cm^2)	1400	1200

Controlling of Pneumatic Cylinder

The Compressor is connected to 2/2 manual operated directional control valve (dcv) and this dcv connected to port 1 of solenoid operated 3/2 dcv 1V3 and 1V3 as shown in Fig. 2. The port 2 of solenoid operated 3/2 dcv 1V3 and 1V3 is connected to port 5 of 5/2 pilot operated dcv (1V4). Then the port 4 of 1V4 is connected to variable flow control valve 1V5. The port 2 of 1V4 dcv is connected to the variable flow control valve 1V6. Both flow control valve 1V5 & 1V6 is connected to inlet and outlet port of double acting pneumatic cylinder respectively.

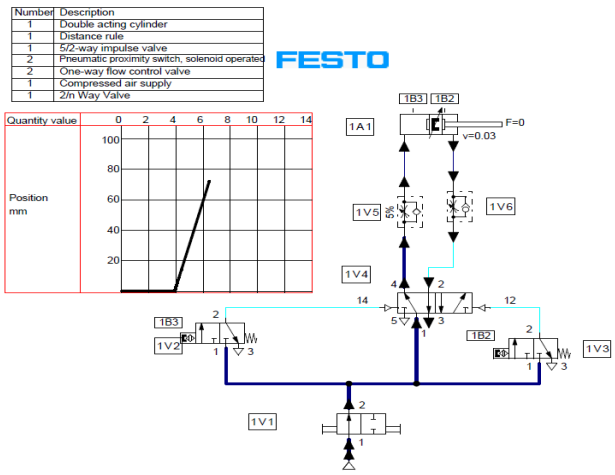

Figure 2: Working pneumatic circuit – Forward Stroke

By using flow control valve the flow of air in pneumatic cylinder changes the timing of forward and reverse stroke according to variation of air flow. Due to this the time of reciprocation of rack is adjusted. The pinion rotates according to the motion of rack and hence the as the reciprocating speed changes the pinion rotation changes accordingly. As the speed of pinion changes the drive pulley speed also changes and hence we successfully adjusting time of belt conveyor moving. For step motion of belt conveyor is achieved simply by adjusting to reverse flow control valve.
Thus, the operation of double acting cylinder is control by using this circuit.

Analysis and Results

Structural analysis of Base:
The all assembly component are place on the base surface.
By calculating weight of each component using material property and volume, the total load action on base is 300N. The load of 300N is applied on the surface of base and fixed the support at corner of the base.

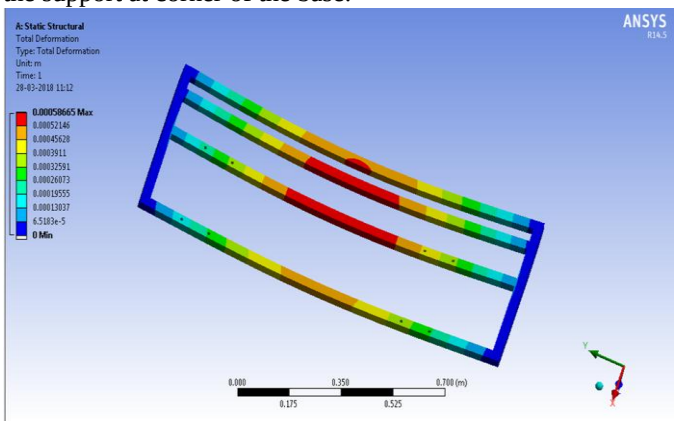

Figure 3: Ansys results of total deformation

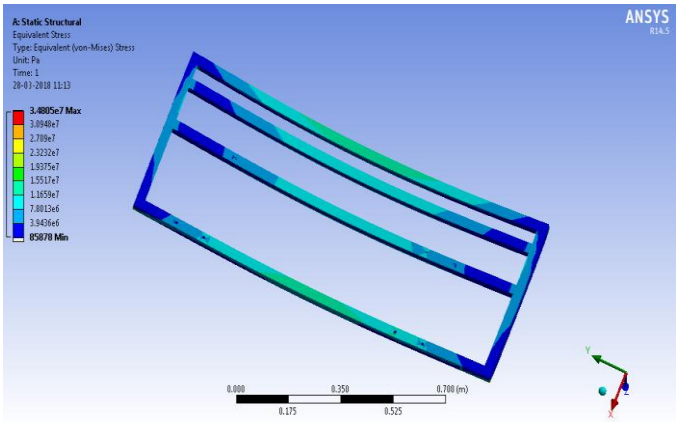

Figure 4: Ansys results of equivalent von mises stresses

From above analysis, we get the maximum equivalent stress 34.805 MPA, and minimum equivalent stress 0.085878 MPA. The results are shown below.

Table 4: Results

Material	Density	Yield Strength (Material)	Maximum Equivalent Stress(analysis)	FOS
Plain Carbon Steel	7800 (kg/M^3)	350 MPA	34.805 MPA	10

Conclusions

From this paper by understanding the design of conveyor specially belt conveyor driven by pneumatic cylinder and factor which are considered for design of mechanism for belt conveyor which is driven by pneumatic cylinder.
From design of rack and pinion mechanism and chain drive, the factors which are to be considered are totally depending upon force to be transmitted and gear ratio.
The scope of this paper will be producing the conveyor system that will be infilling the required demands for the packing purpose.

References

[1] Prof.S.B.Bansode, Mayur B. Wadkar, Amol M. Gharge, Vishakha R. Patil, "Design and Fabrication of Pneumatic Conveyor System", Volume: 04 Issue: 04, Apr -2017, ISSN: 2395-0072.
[2] Moataz A. Youssry, Wael M. Elmayyah, Mohamed H. Mabrouk, Hussein M. Mahgoub, "Parametric Study Of A Low Cost Pneumatic System Controlled By On/Off Solenoid Valves", Volume 2014, ISSN: 236-250.
[3] Christysofi. M, Murugeswari. M, Gurubalan.R, Balasubramanani.P, Maheswari.M, "Automatic Oil Packing Machine Using Pneumatic System", Volume: 04 Issue: 09, Jun -2017, ISSN 2396-2399.
[4] Konakalla Naga Sri Ananth, Vaitla Rakesh, "Design and Selecting the Proper Conveyor-Belt", Pothamsetty Kasi Visweswarao International Journal of Advanced Engineering Technology, E-ISSN 0945-0949.

[5] Kalaikathir Achchagam. "Design Data ", Compiled by PSG College of Technology, Coimbatore – 641 004 India.
[6] Fenner Dunlop "Conveyor Handbook" conveyor belting," Australia, June 2009.
[7] Besser Service Bulletin, "Conveyor Belt Basic Rules and Procedure for Tracking", 2006, pp. 1-7.