International Journal of Electronics Engineering Research.
ISSN 0975-6450 Volume 9, Number 2 (2017) pp. 217-232

http://www.ripublication.com

Modified Algorithm for Denoising of Mammographic Images

Smriti Bhatnagar[1] and R.C. Jain [2]

Electronics and Communication Engineering Department,
Jaypee Institute of Information Technology, Noida, India.

Abstract

Mammographic images are used for detection of breast cancer in women. In this paper denoising algorithms for mammographic images in wavelet domain are considered. A modified approach for denoising of mammographic images using Diversity Enhanced Wavelet Transform has been proposed. Diversity of the Wavelet Transform is enhanced by taking different mother wavelets and different number of levels to select for the optimized set of mother wavelet and number of iterations which results in maximum PSNR value. Proposed method is applied on large data set of digital mammographic images with four different types of thresholding: Bayesian shrink,Visu shrink, Neighbourhood shrink and Modified Neighbourhood shrink. The results are compared with the Discrete Wavelet Transform method using Peak Signal to Noise Ratio (PSNR) in dB and Mean Square Error (MSE). Results clearly indicate the superiority of the proposed method in all the four cases over exiting wavelet based method.

Keywords: Mammographic images, Diversity Enhanced Discrete Wavelet Transform, Discrete Wavelet Transform, Thresholding, PSNR, MSE.

I. INTRODUCTION

Lately diagnosis and treatments of many diseases, starting from early stages of identification to complex stages of surgery depend heavily on medical images and different modalities of medical imaging. Popular modalities are X-Ray scan,

Magnetic Resonance Imaging (MRI), Computed Axial Tomography (CAT), Ultra sonography(USG), electorcardiography (ECG), Intra-Vascular Ultra Sound (IVUS), and Mammography. Medical images get corrupted by the noise during the process of acquisition, transmission and reception. Image denoising is still a challenging problem for researchers because the performance of image denoising algorithms greatly affects the accuracy and speed of clinical diagnosis.

Mammography is low energy X Ray of breast, used for early detection of breast cancer in women. World Health Organization report 2013[1], indicates breast cancer as one of the leading cause of death in women all over the world. Prognosis is the first step towards best cure for breast cancer. Motivated by this fact for accurate diagnosis, we try to modify and improve the pre processing or denoising algorithms for Mammographic images. Main objective of these denoising algorithms is to acquire best estimate of original image from the corrupted image.

Denoising algorithms should focus on removing the noise and preserving the boundaries, edges, contrasts and textures. Spatial filters like Weiner Filters ,Median Filters etc are when used, result in blurred edges and textures. Multi Resolution Analysis is more successful in preserving the originality while removing the noise. In this paper, focus is on Multi resolution Analysis based denoising algorithms [2,3]. Capability of wavelet transform to capture the energy of the signal as well as compacting it in a very few transform coefficients is useful. Wavelet transform coefficients with smaller values are equivalent to noisy part of the signal while coefficients with larger magnitude are representing important detailed features of the signal. By adopting some nonlinear thresholding technique, we can very easily differentiate between the noise and signal and eliminate noise [4,5,6]. In this way important attributes of the image are preserved. Thus original image is extracted from corrupted image in the best possible way. However only a proper combination of a type of mother wavelet and number of decomposition level gives the best result. Unfortunately this best optimized pair is not known in advance. This pair is different for different imaging modalities. In this case the Diversity Enhanced Discrete Wavelet Transform appears as the solution [7,8].

In this paper we have developed improved denoising algorithm using diversity enhanced discrete wavelet transform along with four thresholding methods namely, Bayesian Shrink , Visu Shrink , Neighbourhood Shrink and Modified Neighbourhood Shrink. This paper is organized as follows. In Section II, mathematical background and notations associated with wavelet bases are given. Section III gives the idea of Diversity Enhanced Discrete Wavelet Transform and how it helps towards selections of optimized pair of mother wavelet function and level of decomposition. In Section IV, idea of filter banks and their use in implementation of DWT and DE DWT is discussed. Section V elaborates the denoising schemes with different type of thresholding estimates. These four thresholding methods are used along with DWT and DEDWT to denoise mammography images. In Section VI, a comparison of different thresholding methods with different transforms is done on the basis of PSNR. After applying these algorithms on a large set of data and analyzing the results are obtained. In the end conclusions are given.

II. MATHEMATICAL BACKGROUND

In wavelet analysis, a signal is represented with another function known as wavelets, having short duration and finite energy. This type of transformation of signal under consideration is called wavelet transform. Choice of a particular wavelet function - out of a large variety available depends on application considered. Once a particular wavelet function is chosen it can be manipulated with the help of two parameters namely translation and scaling. The translation means the shifting of the central position of the mother wavelet along the time axis and the scaling means either the stretching or compressing the mother wavelet in time domain. If this process of translation and scaling are done in continuous mode it is known as Continuous Wavelet Transform and if they are done in discrete steps then it's called Discrete Wavelet Transform. Wavelet function is mathematically represented as in (1)

$$\psi_{\tau,s}(t) = \frac{1}{\sqrt{s}}\,\psi\left(\frac{t-\tau}{s}\right) \tag{1}$$

T = translation or location shift and s = scaling factor. Wavelet transform of a function f(t) is given in (2)

$$W(\tau,s) = \int f(t)\frac{1}{\sqrt{s}}\,\psi\left(\frac{t-\tau}{s}\right)dt \tag{2}$$

For every set of (s, τ), we have a wavelet transform coefficient . Actually two sets of functions namely wavelet functions (mother wavelet) ψ(t) and scaling functions φ(t) are used to decompose the signal and these functions are complementary to each other. Mother wavelet follows the following properties

- $\int_{-\infty}^{\infty} \psi(t)\,dt = 0$
- $\int_{-\infty}^{\infty} |\psi(t)|^2\,dt = 1$

Function f(t) can be represented in terms of mother wavelet at different resolution by

$$W(j,k) = \int f(t)\,2^{j/2}\,\psi(2^j t - k)dt \tag{3}$$

$$\psi_{j,k}(t) = 2^{j/2}\,\psi(2^j t - k) \tag{4}$$

$$\psi_{0,0}(t) = \psi(t) \quad \text{MotherWavelet} \tag{5}$$

Where s and τ are defined as s = $2^{j/2}$ and τ = k $2^{j/2}$

J and k are integers for DWT. Wavelet Transform follows the concept of nested space in vector space.

Following are the properties of the wavelet function and scaling function

$$V_0 = span_k\{\varphi(t-k)\},\ V_1 = span_k\{\varphi(2t-k)\}\ and\ V_j = span_k\{\varphi(2^j t-k)\} \tag{6}$$

$$V_J \subset V_{J+1} \subset V_{J+2} \subset V_{J+3} \ldots\ldots\ldots\ldots \subset V_\infty \tag{7}$$

$$W_0 = span_k\{\psi(t-k)\},\ W_1 = span_k\{\psi(2t-k)\}\ and\ W_j = span_k\{\psi(2^j t-k)\} \tag{8}$$

$$W_{-1} \perp W_0 \perp W_1 \perp \ldots \perp W_{J-1} = span_k\{\psi(2^j t-k)\} \tag{9}$$

$$V_1 = V_0 \oplus W_0\ ,\ V_2 = V_1 \oplus W_1\ \ and\ V_j = V_{j-1} \oplus W_{j-1} \tag{10}$$

$$\varphi(t) = \sqrt{2}\ \sum_k h(k)\varphi(2t-k)\ ,\ \ \varphi(t) = \sqrt{2}\ \sum_k g(k)\,\psi(2t-k) \tag{11}$$

By using two variables representation, a sufficient amount of redundancy is used to retain the local properties of original signal. A fast computation of DWT is possible by implementing the scaling function equation and wavelet function equations in different subspaces with the help of convolution and filter bank concept of signal processing. This is the main reason of use of wavelets in signal processing [5,6,9].

Two sets of coefficients h(k) and g(k) act as low pass and high pass filter coefficients respectively.

III. DIVERSITY ENHANCED WAVELET TRANSFORM

The discrete wavelet transform, DWT, provides a concentration of the energy of the input signal in fewer numbers of coefficients, results in reduced number of operations. Different energy concentrations are obtained for a given signal, using different mother wavelet function. So, for a given input signal there is a best mother wavelet function,

that realizes the higher energy concentration. Similarly, for every noisy image there is a best pair of parameters formed by mother wavelet and primary resolution levels which maximises the peak signal to noise ratio (PSNR) and minimises mean square error (MSE).

Denoising algorithms are sensitive to the parameters of wavelet transform used. Hence new Discrete Wavelet Transform has been constructed, which is less sensitive to the selection of these parameters. The construction is based on the diversity enhancement concept. Such transform is useful in de noising of low signal to noise ratio (SNR) signals. This transform is obtained by computing few wavelet transform with different parameters (mother wavelets and level of decomposition).

The DEDWT of the input image, is a generalised matrix. Each column of this matrix is an image, representing different DWT of the image x_i. The first column contains the image obtained using the one set of parameters pair (ψ_i ,m_i), the second column contains the image obtained using another set of the parameter pair (ψ_i ,m_{i+1}) and so on . The function ψ_i represents the first mother wavelet function and ψ_f the last one. Similarly m_i denotes the initial number of iterations and m_f the final one. Every such transformed images are thresholded and then inverse transform is performed on each set [7,8,10].

Final denoised image is the average of all such images having a higher PSNR is extracted.

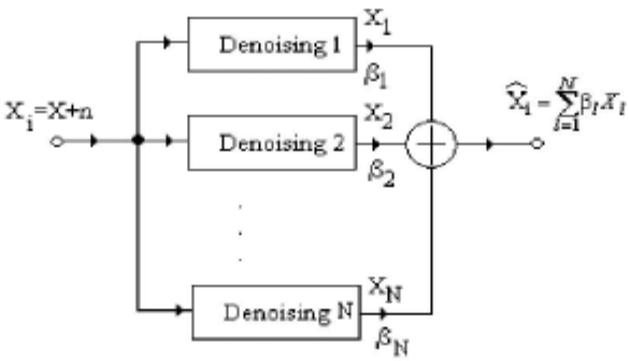

Figure 1: Structure of DEDWT

IV. FILTER AND FILTER BANKS

Filter

A filter is linear time invariant operator. It acts on input vector x. The output vector y is the convolution of x with a fixed vector h. The vector h contains the filter coefficients[11].

- h(0), h(1) , h(2),.....Our filter are digital, not analog , so the coefficients h(n) come at discrete times t = nT .The action of a filter in time and frequency is the foundation on which signal processing is built.

Filter Bank

- A filter bank is a set of filters. The analysis bank often has two filters, low pass and high pass. They separate the input signal in to frequency bands [12].
- Those sub signals can be compressed much more efficiently than the original signal. Then they can be transmitted or stored. At any time the signals can be recombined (by the synthesis bank).
- It is not necessary to preserve the full outputs from the analysis filters. Normally they are down sampled. We keep only the even components of the low pass and high pass filter outputs.
- Two sets of coefficients h(k) and g(k) in scaling function representation are acting as low pass and high pass filter coefficients respectively.

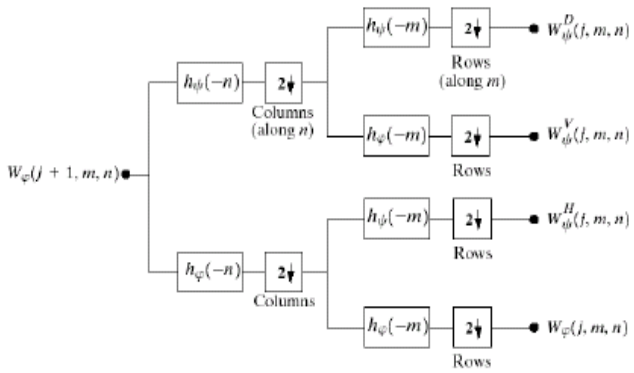

Figure 2(a) Decomposition of image.

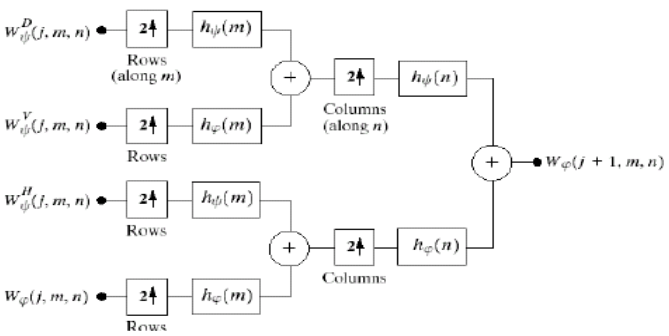

Figure 2(b) Reconstruction of image

V. THRESHOLDING AND DENOISING SCHEME

Thresholding

The key parameter in all thresholding rules provided in the following section is t (threshold value)[12,13,14]. Optional thresholding occurs when the thresholding parameter is set to the noise level σ = t . Setting t < σ ,will allow unwanted noise enter the estimate while setting t > σ will destroy the information that really belongs to underlying image or signal. Thus best possible thresholding or denoising occurs when t = σ [4,5,15].

Hard Thresholding- To suppress the noise we apply the following non linear transform to the wavelet coefficients. Hard threshold is to either keep or kill approach and is appealing.

$$F(x) = x.I(\,|x| > t\,) \tag{12}$$

Soft Thresholding- Soft Threshold shrinks coefficients above the threshold in absolute value. The only difference between the hard and the soft thresholding procedure is in choice of the nonlinear transform on the empirical wavelet coefficients.

$$^{S}(x) = sgn(x)(\,|x| - t)I(\,|x| > t\,) > t\,) \tag{13}$$

Techniques Applied

Bayesian or Normal Shrink calculates the threshold value (T_N), which is adaptive to different sub band characteristics. $T_N = \frac{\beta\,\sigma^2}{\sigma_y}$, where the scale parameter β is

computed once for each scale using the following relation : $\beta = \sqrt{\log(\frac{L_k}{J})}$. L_k is the

length of the sub band at k^{th} scale, σ^2 is the noise variance, which is estimated from the sub band HH_1, using the

$$\hat{\sigma}^2 = \left[\frac{medain\,(|Y_{ij}|)}{0.675}\right]^2 \text{ , } Y_{ij} \in subband\ HH_1 \tag{14}$$

Where $\hat{\sigma}_y{}^2$ is the standard deviation of the sub band under consideration.

Visual shrink combination of soft thresholding and universal threshold is Visu Shrink. Threshold T can be calculated using the formulae,

$$T = \sigma\sqrt{2}logn^2 \,. \tag{15}$$

This method performs well under a number of applications because wavelet transform has the compaction property of having only a small number of large coefficients. All the rest wavelet coefficients are very small. This algorithm offers the advantages of smoothness and adaptation but exhibits visual artefacts.

Neighbour Shrink Let d(i,j) denotes the wavelet coefficients of interest then d(i,j) = d(i,j) * B(i,j) *where*

$$B(i,j) = \left(1 - \frac{T^2}{S^2(i,j)}\right) \;\; and \;\; S^2 = \sum d^2(i,j) \tag{16}$$

Modified Neighbour Shrink is same as Neighbour Shrink except

$$B(i,j) = \left(1 - \; 0.75 * \frac{T^2}{S^2(i,j)}\right) \;\; and \;\; S^2 = \sum d^2(i,j) \tag{17}$$

Image Processing using Wavelets

Three steps are required as:

(1) Decompose the image in to wavelet domain

(2) Process the wavelet coefficients according to method selected for thresholding and denoising.

(3) Reconstruct the image with altered wavelet coefficients.

Steps are represented in the form of flow chart in Figure 3.

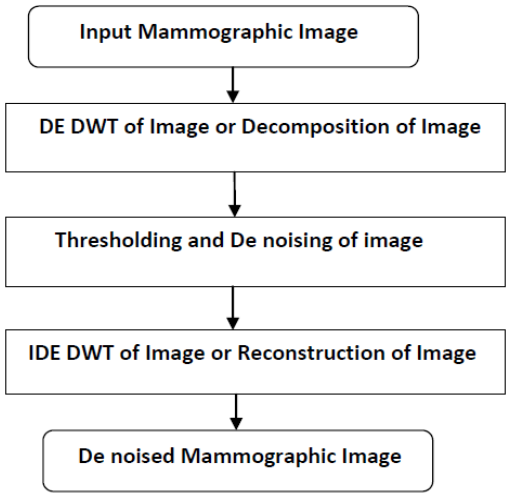

Figure 3. Flow chart for the proposed method of De noising of Mammograms.

***Evaluation Criteria**:* The objective quality of reconstructed image is measured by:

$$PSNR = 10\log_{10}\frac{255^2}{mse}$$

where mse is mean square error between original(x) and denoised image(x)

$$MSE = \frac{1}{M \times N}\sum_{i=1}^{M}\sum_{j=1}^{N}[x(i,j) - \hat{x}(i,j)]^2$$

VI. RESULTS

On a set of mammographic images given in database DDSM [16], proposed denoising algorithms are tested using Mat lab. The experiments are conducted on images of size 256 × 256 pixel , having different noise levels for AWGN. For standard deviation of noise σ = 10 and σ = 20, all four methods of thresholding namely Bayesian, Visu, Neighbourhood and modified neighbourhood are implemented using DEDWT and DWT. PSNR and MSE are calculated in each case. Results are tabulated in four different tables for a set of 10 arbitrary images selected from data base.

Table 1 and Table 2 represent the PSNR in dB as well as MSE for all four thresholding methods considered for σ =10 and σ = 20, using DWT for denoising. Table 3 and Table 4 represent the similar results for DEDWT. On analysing these results it is clearly seen that the PSNR and MSE in case of DEDWT is considerably improved for each image for all thresholding methods and noise variances.

Figure 4 and 5 represents the comparative bar charts for clear pictorial representation of results for PSNR. Similarly Figure 6 and Figure 7 are for pictorial represention and comparision of MSE in different cases Figure 8 to Figure 11 represent an arbitrary selected image for denoising using different methods of thresholding, for different noise variances using DEDWT and DWT.

Table 1. Image Denoising using DWT for σ = 10.

Sr. No.	Image No.	DISCRETE WAVELET TRANSFORM, σ = 10							
		Bayes Shrink		Visu Shrink		Neigborhood Shrink		Modified Neighbourhood Shrink	
		MSE	PSNR in dB	MSE	PSNR in dB	MSE	PSNR in dB	MSE	PSNR in dB
1	Mamo 1	60.07	30.34	163.1	26	73.8	29.44	54.1	30.79
2	Mamo 2	52.15	30.05	154.3	26.24	70.5	29.64	51.9	30.97
3	Mamo 3	47.31	31.38	185.9	25.43	70.2	29.66	50.9	31.06
4	Mamo 4	49.51	31.18	171	25.8	69.1	29.73	50.2	31.11
5	Mamo 5	50.25	31.12	150.7	26.34	71.2	29.6	51.9	30.97
6	Mamo 6	54.48	30.76	156.4	26.18	71.5	29.58	52.7	30.9
7	Mamo 7	49.59	31.17	162.5	26.02	70.8	29.63	51.2	31.03
8	Mamo 8	51.95	30.07	152.7	26.29	70.4	29.64	51.6	31.98
9	Mamo 9	53.53	30.84	141.7	26.61	72.9	29.5	52.9	30.89
10	Mamo 10	49.52	31.37	163.1	26.08	71.05	29.73	52.18	31.13

Table 2. Image Denoising using DWT for σ = 20.

Sr. No.	Image No.	DISCRETE WAVELET TRANSFORM, σ = 20							
		Bayes Shrink		Visu Shrink		Neigborhood Shrink		Modified Neighbourhood Shrink	
		MSE	PSNR in dB	MSE	PSNR in dB	MSE	PSNR in dB	MSE	PSNR in dB
1	Mamo 1	247.3	24.19	512.6	21.03	298.14	23.38	219.88	24.7
2	Mamo 2	235.7	24.4	500.3	21.13	249.20	23.44	217.51	24.75
3	Mamo 3	232.4	24.46	563.6	20.62	298.09	23.38	220.57	24.69
4	Mamo 4	229.8	24.51	538.6	20.81	288.89	23.52	210.49	24.89
5	Mamo 5	230.8	24.49	504.8	21.09	294.48	23.44	216.64	24.77
6	Mamo 6	229.8	24.51	504.1	21.1	284.73	23.58	208.04	24.94
7	Mamo 7	221.1	24.68	518.5	20.98	287.88	23.53	210.76	24.89
8	Mamo 8	236.6	24.39	506.9	21.08	296.07	23.4	218.85	24.72
9	Mamo 9	230.1	24.5	478.4	21.33	294.41	23.44	216.49	24.77
10	Mamo 10	218.6	24.73	523.55	20.94	284.17	23.59	206.64	24.97

Table 3. Image Denoising using DE DWT for σ = 10.

Sr. No.	Image No.	DIVERSITY ENHANCED DISCRETE WAVELET TRANSFORM, σ = 10							
		Bayes Shrink		Visu Shrink		Neigborhood Shrink		Modified Neighbourhood Shrink	
		MSE	PSNR in dB	MSE	PSNR in dB	MSE	PSNR in dB	MSE	PSNR in dB
1	Mamo 1	32.5	33	69.38	29.71	29.38	33.44	25.25	34.1
2	Mamo 2	31.71	33.11	62.18	30.19	26.64	33.87	21.86	34.73
3	Mamo 3	40.82	32.02	95.63	28.32	35.09	32.67	31.84	33.1
4	Mamo 4	36.22	32.54	82.83	28.94	30.72	33.25	26.99	33.81
5	Mamo 5	31.74	33.11	58.79	30.43	27.46	33.74	22.5	34.6
6	Mamo 6	32.05	33.07	63.43	30.1	27.76	33.69	22.95	34.52
7	Mamo 7	34.71	32.72	69.65	29.7	30.40	33.3	26	33.98
8	Mamo 8	30.18	33.33	62.76	30.15	26.61	33.87	22.16	34.67
9	Mamo 9	28.60	33.56	46.63	31.44	25.43	34.07	20.44	35.02
10	Mamo 10	34.61	32.77	70.82	29.62	29.34	33.45	25.03	34.14

Table 4. Image Denoising using DE DWT for σ = 20.

Sr. No.	Image No.	DIVERSITY ENHANCED DISCRETE WAVELET TRANSFORM, σ = 20							
		Bayes Shrink		Visu Shrink		Neigborhood Shrink		Modified Neighbourhood Shrink	
		MSE	PSNR in dB	MSE	PSNR in dB	MSE	PSNR in dB	MSE	PSNR in dB
1	Mamo 1	86.49	28.76	126.46	27.11	89.38	28.61	66.43	29.9
2	Mamo 2	87.73	28.69	119.65	27.35	86.13	28.77	61.76	30.22
3	Mamo 3	108.49	27.77	183.41	25.49	103.67	27.97	83.14	28.93
4	Mamo 4	98.57	28.19	156.44	26.18	95.34	28.33	73.36	29.47
5	Mamo 5	83.45	28.91	116.95	27.45	82.23	28.98	58.82	30.43
6	Mamo 6	88.93	28.64	120.35	27.32	88.08	28.68	63.26	30.11
7	Mamo 7	93.06	28.44	134.95	26.82	91.57	28.51	68.57	29.76
8	Mamo 8	86.27	28.77	121.84	27.27	86.24	28.77	62.67	30.16
9	Mamo 9	78.45	29.18	89.42	28.61	78.92	29.15	53.65	30.83
10	Mamo 10	92.73	28.45	147.14	26.45	87.2	28.72	65.56	29.96

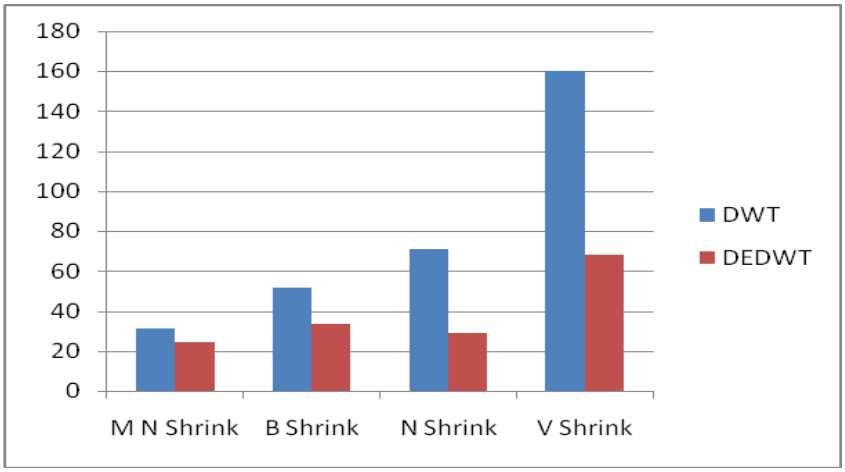

Figure 4. Comparison of MSE values for Denoising using different thresholding techniques in DWT and DE DWT for σ = 10.

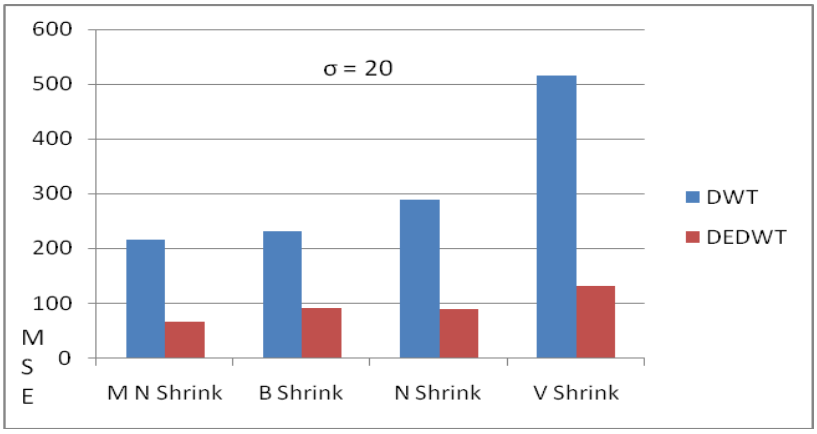

Figure 5. Comparison of MSE values for Denoising using different thresholding techniques in DWT and DE DWT for σ = 20.

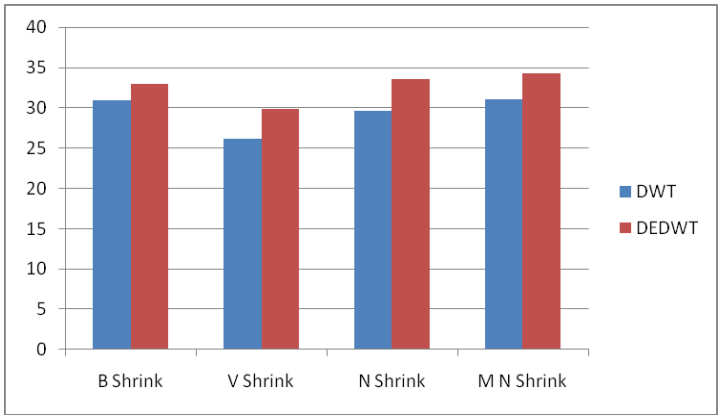

Figure 6. Comparison of PSNR values for Denoising using different thresholding techniques in DWT and DE DWT for σ = 10.

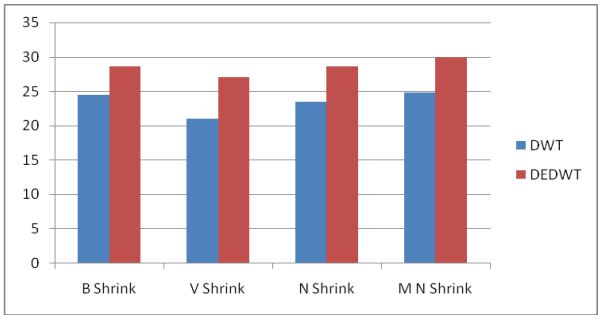

Figure 7. Comparison of PSNR values for Denoising using different thresholding techniques in DWT and DE DWT for σ = 20.

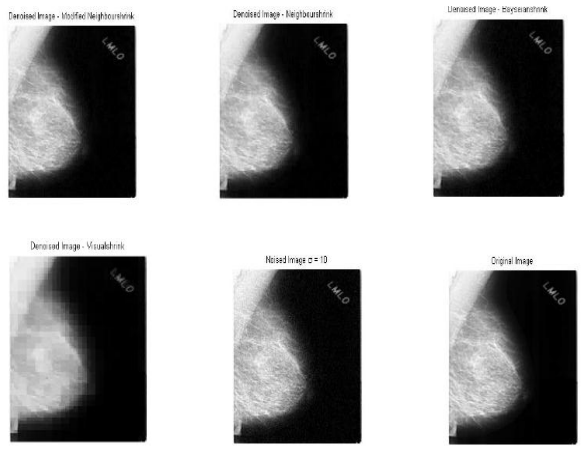

Figure 8. Denoising using DWT for σ = 10.

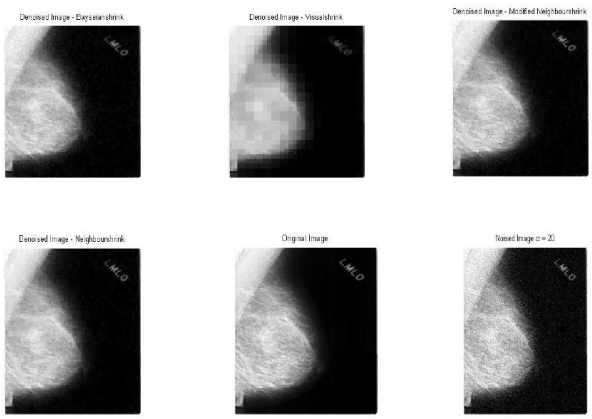

Figure 9. Denoising using DWT for σ = 20.

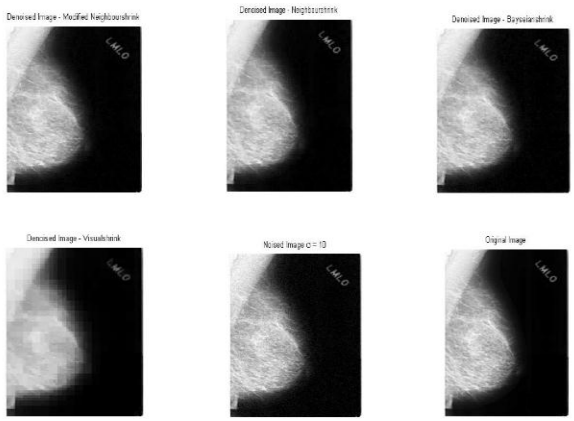

Figure 10. Denoising using DEDWT for σ = 10 .

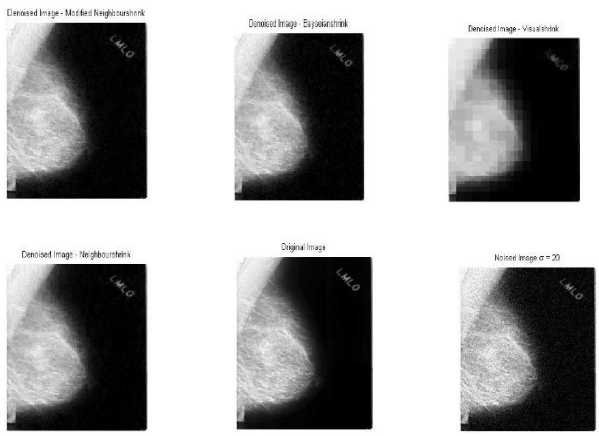

Figure 11. Denoising using DEDWT for σ = 20.

VII. CONCLUSIONS

In this paper, we discussed the implementation of diversity enhanced wavelet transform based mammographic image de noising using four different thresholding techniques. PSNR and MSE improvement in each case is compared with denoising method using DWT. This comparison is done for different noise variances for AWGN noise. Encouraging experimental results are found and concluded as

- DEDWT gives better PSNR and MSE , as compared to the method using DWT, irrespective of the method of thresholding as well as noise variances. A considerable improvement of approximately 4-5 dB is obtained in PSNR of every experiment conducted.
- As the noise variance σ increases, the PSNR for all the cases considered is decreasing which is expected also.

- Bayes Shrink and Modified Neighbourhood Shrink methods give better PSNR over Visu Shrink and Neighbourhood Shrink.
- DEDWT with Modified Neighbourhood Shrink method out performs all other methods discussed in this paper for denoising of Mammographic images.

ACKNOWLEDGEMENTS

I would like to acknowledge the organizers of Digital Database for Screening Mammography (DDSM). The present work could not have been possible without the public databases being easily available for research. I thank the researchers releasing their databases for this purpose.

REFERENCES

1. World Health Statistics. Tech. rep. World Health Organization (WHO), 2013. http://www.who.int/gho/publications/world_health_statistics/
2. A.Mencattini, M. Salmeri, R. Lojacono, M. Frigerio, and F. Caselli, "Mammographic images enhancement and denoising for breast cancer detection using dyadic wavelet processing," IEEE Transactions on Instrumentation and Measurement, vol. 57, no. 7, pp. 1422–1430, 2008.
3. G. Strang and T. Q. Nguyen, *Wavelets and Filter Banks,* Wellesley-Cambridge Press, Wellesley, MA, Revised Edition, 1998.
4. D.Donoho. De-noising by soft thresholding. IEEE Trans. on Information Theory, vol. 38(2), pp. 613-627, 1995.
5. D.Donoho and I. Johnstone."Ideal spatial adaptation by wavelet shrinkage" Biometrika, vol. 81(3), pp. 425-455,1994
6. M.Vetterli, "Wavelets and Filter Banks: Theory and Design" IEEE Trans. on Signal Processing, vol. 40, pp.2207-2232, September 1992.
7. A. Isar, S. Moga, C. Nafornita, M. Oltean, I. Adam, "Image Denoising using Wavelet Transforms with Enhanced Diversity". Proc. International Conference Communications 2006, Bucharest, June, 3-4, pp.161-164, 2006.
8. D.S.Reddy,S.Vardarajan, M.N.Giriprasad, M. Sadasiva, "A Novel Approach to Image Denoising using Diversity Enhanced Wavelet Transforms". International Conference on Advanced Computing Technologies (ICACT), Sept 11-13, pp 1-5, 2013.
9. K.P. Soman, Ramchandran K.I. and Resmi N.G. " *Insight into Wavelets from Theory to Practice*" PHI Learning Private Limited, New Delhi. Third Edition, October 2013.
10. D. Isar, A. Isarand Q. Andre"Multi scale MAP Denoising of SAR Images" OCEANS 2006, 18-21 Sept., pp 1-6,2006.

11. P. P. Vaidyanathan, *Multirate Systems and Filter Banks,* Prentice Hall, Englewood Cliffs, NJ, 1993.

12. P. Zhao, Z. Shang, and C. Zhao, "Image denoising based on Gaussian and non-Gaussian assumption,"International Journal of Wavelets, Multiresolution and Information Processing, vol. 10, no. 2, Article ID 1250014, 2012.

13. Z. Huang, B. Fang, X. He, and L. Xia, "Image denoising based on the dyadic wavelet transform and improved threshold," International Journal of Wavelets, Multiresolution and Information Processing, vol. 7, no. 3, pp. 269–280, 2009.

14. F. Luisier, T. Blu, and M. Unser, "A new SURE approach to image denoising: interscale orthonormal wavelet thresholding," IEEE Transactions on Image Processing, vol. 16, no. 3, pp. 593–606, 2007.

15. M. Saha, M. K. Naskar ,and B. N. Chatterji "Soft, Hard and Block Thresholding Techniques for Denoising of Mammogram Images" IETE Journal of Research Volume 61, Issue 2, pp 186-191,2015.

16. Digital Database for Screening Mammography (DDSM) Link: http://marathon.csee.usf.edu/Mammography/DDSM.