Advances in Fuzzy Mathematics.
ISSN 0973-533X Volume 12, Number 2 (2017), pp. 283-296

http://www.ripublication.com

Fuzzy Analysis of Synergistic Collaboration of Biserial and Parallel Servers with a Common Server

Sameer Sharma*
Department of Mathematics
D.A.V. College, Jalandhar, 144008, Punjab, India

Abstract

The paper highlights the significant attempt made to find various characteristics of queue network in which a biserial and two parallel servers are linked in series with a common server in a fuzzy environment with the aim to solve problems associated with a variety of fields such as industry, education, banking, insurance, travel and tours and more significantly in data communication and processing etc. Most of queuing optimization problems is static in nature, whereas in real world problems, the various queue characteristics such as arrival rate, service rate of customers etc. are uncertain in nature. The α - cut approach and various fuzzy arithmetic operations are used to estimate the uncertainty associated with input parameters. To illustrate the validity of proposed approach in this paper, the numerical computation is facilitated.

Keywords: Fuzzy arrival rate; Fuzzy service rate; Biserial server; Parallel servers; Mean queue length; Triangular fuzzy numbers.

1. INTRODUCTION

Waiting lines or queues are a common occurrence both in everyday life and in a variety of business and industrial situations. It is a common trend that waiting lines

* *Corresponding Author*

are may be found in communication system, voice or data traffic queues up for transmission, in manufacturing system with several work stations, units completing work in one station wait for access to the next, vehicles requiring service wait for their turn in a garage, patients arrive at a doctor clinic for treatment, etc. While investigating traditional queuing theory, it has been found that inter-arrival times, service times etc. are required to follow certain probability distribution with fixed parameter. However in many real life situations, the arrival rate, service rate of customers are typically described by linguistic values such as fast, slow or moderate rather than complete probability distribution. It is observed that the arrival rate, service rate, etc. may be expressed by possibility rather than probability; the fuzzy queue model would be a more realistic approach than a classical queuing theory method. To measure the uncertainty, vagueness, imprecision involved in arrival rate, service rate, etc. fuzzy logic theory is introduced. Fuzzy logic consists of the theory of fuzzy sets and possibility theory as given by Zadeh (1978).

It has been studied that a limited amount of literature is available on fuzzy analysis, although a significant amount of work has been done on fuzzy queues in the recent past. Maggu (1970) introduced and discussed the concept of bitendom in theory of queues. Singh (1979) studied the queuing networks of some serial / biserial channels. Prade (1980) applied fuzzy or possiblistic models for queuing system. Stanford (1982) discussed the set of limiting distribution for a Markov chain with fuzzy transition probabilities. Li and Lee (1989) investigated the analytical results for M/F/1/∞ and FM/FM/1/ ∞ , where F represent the fuzzy time and FM represents fuzzified exponential distribution using Markov's chain. Buckley (1990) considered the queuing system with multiple and parallel servers whose arrival and service completion are governed by possibility distribution. Buckley et al (1990) used α cuts to evaluate fuzzy equations. Negi and Lee (1992) proposed a procedure using α cuts and two variable simulations to analyse fuzzy queues. Kao et al (1999) used parametric programming to analysis fuzzy queues. Nagoorgani and Retha (2006) studied tandem queues in fuzzy environment. Singh, T.P. et al (2005) studied the transient behaviour of a queuing network with parallel biserial queues. Kumar et al (2006) described the study state behaviour of a queue model comprised of two subsystems with biserial channels linked with a common channel. Pourdarvish and Jamshidi (2008) considered the application of fuzzy set in transient behaviour of queuing system. Singh and Pardeep (2009) discussed the transient behaviour of queuing network with parallel biserial servers. Robert and Ritha (2010) proposed machine interference problem with fuzzy environment. Seema et al (2013) has derived various characteristics of a queue network in which two parallel biserial servers are linked to a common server in series under fuzzy environment.

In this paper, the fuzzy membership functions based on Zadeh's extension principle is applied to a network queue model comprised of biserial and parallel channels linked in series to a common server given by Gupta et al (2007). The α cuts approach and

fuzzy arithmetic operations are used to derive various system characteristics. The various concepts of Fuzzy Set Theory along with Triangular Fuzzy Number and Fuzzy Arithmetic Operations are discussed.
A new fuzzy biserial queue model is introduced. The methodologies to convert the input data into fuzzy numbers and to find various queue characteristics in fuzzy environment are also discussed. A numerical analysis has been conducted on the proposed model and results are discussed.

2. Proposed Fuzzy Queue Model

According to Zadeh development theory [1978] and by the use of the possibility theory concepts, Stanford fuzzy Markov chain [1982], Li and Lee [1989] proposed that every fuzzy queuing model could be considered as a classical queuing theory model by considering following changes: the probability distribution function of the time between two consecutive arrivals which is assumed to follow the exponential distribution with the parameter λ is considered to be $\tilde{\lambda}$ in fuzzy environment which is an approximation of the mean of its possibility distribution and similarly, the servicing rate μ is considered to be the fuzzy number $\tilde{\mu}$ which is the mean of its possibility distribution in fuzzy environment. The proposed fuzzy model is shown in Fig.1. The following nomenclature has been used in the paper.

$\tilde{\lambda}$: Fuzzy arrival rate

$\tilde{\mu}$: Fuzzy service rate

n : Number of customers / jobs arriving

$\tilde{P}_{ij}(s)$: Possibility that the system is in the state (i, j) at any time t

L : Mean queue length of the customers system

$E(W)$: Expected waiting time customers (jobs)

$\tilde{L}_S$: Fuzzy mean queue length (number of customers) of the system

$E(\tilde{W}_S)$: Expected fuzzy waiting time of the system

2.1. Mathematical Model

The entire model is comprised of three servers S_1, S_2, S_3. The server S_1 consists of two biserial service servers S_{11} and S_{12}. The server S_2 contains two parallel servers S_{21} and S_{22}. Server S_3 is commonly linked in series with each of two servers S_1 and S_2 for completion of phase service demanded either at the servers S_1 or S_2. The service time at the servers S_{ij} (i, j=1, 2) are exponentially distributed. Let mean service rate at S_{ij} (i, j=1, 2) be $\tilde{\mu}_1, \tilde{\mu}_2, \tilde{\mu}_3, \tilde{\mu}_4$ and $\tilde{\mu}_5$ at S_3 respectively. Queues Q_1, Q_2, Q_3, Q_4 and Q_5 are said to be formed in front of the servers if they are busy.

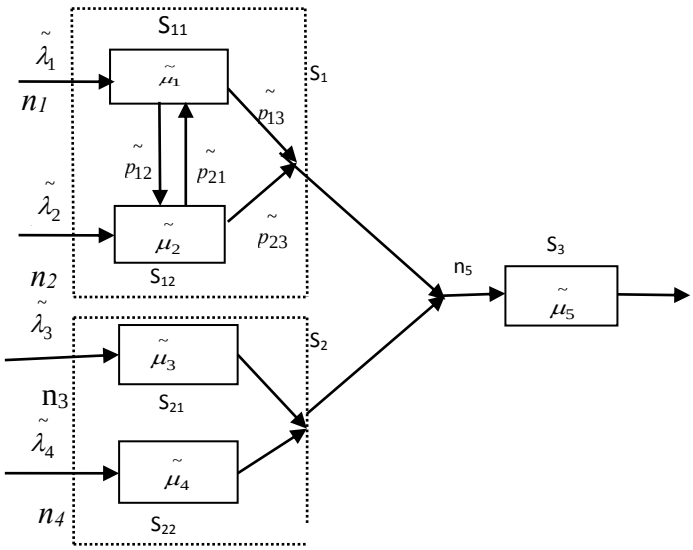

Fig 1: Fuzzy Queue Model

Customers coming at rate $\tilde{\lambda}_1$ after completion of service at S_{11} will go to the network of the servers $S_{11} \to S_{12}$ or $S_{11} \to S_3$ with possibilities $\tilde{p}_{12}$ or $\tilde{p}_{13}$ such that $\tilde{p}_{12} + \tilde{p}_{13} = 1$. The customers coming at rate $\tilde{\lambda}_2$ after completion of service at S_{12} will go to the network of the servers $S_{12} \to S_{11}$ or $S_{12} \to S_3$ with possibilities $\tilde{p}_{21}$ or $\tilde{p}_{23}$ such that $\tilde{p}_{21} + \tilde{p}_{23} = 1$. The customers coming at rate $\tilde{\lambda}_3$ after completion of service at S_{21} will go to the network of the server $S_{21} \to S_3$ and those coming at rate $\tilde{\lambda}_4$ after completion of service at S_{22} will go to the network of the server $S_{22} \to S_3$ The objective is to develop an algorithm to find various queue characteristics for the proposed fuzzy queue model.

The system characteristic of interest are the average queue length and the expected waiting time of customers / jobs .From the knowledge of queue theory as given by Gupta et al [2008], if

$$(i)\frac{(\lambda_1 + \lambda_2 p_{21})}{\mu_1(1 - p_{12}p_{21})} < 1,\ (ii)\frac{(\lambda_2 + \lambda_1 p_{12})}{\mu_2(1 - p_{12}p_{21})} < 1,\ (iii)\frac{\lambda_1'}{\mu_1'} < 1,\ (iv)\frac{\lambda_2'}{\mu_2'} < 1$$

and, $(v)\dfrac{\lambda_1' + \lambda_2'}{\mu_3} + \dfrac{p_{13}(\lambda_1 + \lambda_2 p_{21}) + p_{23}(\lambda_2 + \lambda_1 p_{12})}{\mu_3(1 - p_{12}p_{21})} < 1$,then

the average queue length and the mean expected number of customers for a biserial and two parallel servers linked in series to a common server system are as follows

Mean queue length = $L = \frac{\rho_1}{1-\rho_1} + \frac{\rho_2}{1-\rho_2} + \frac{\rho_3}{1-\rho_3} + \frac{\rho_4}{1-\rho_4} + \frac{\rho_5}{1-\rho_5} = L_1 + L_2 + L_3 + L_4 + L_5$

Where, $L_1 = \frac{\rho_1}{1-\rho_1}, L_2 = \frac{\rho_2}{1-\rho_2}, L_3 = \frac{\rho_3}{1-\rho_3}, L_4 = \frac{\rho_4}{1-\rho_4}, L_5 = \frac{\rho_5}{1-\rho_5}.$

$\rho_1 = \frac{(\lambda_1 + \lambda_2 p_{21})}{\mu_1(1-p_{12}p_{21})}$, $\rho_2 = \frac{(\lambda_2 + \lambda_1 p_{12})}{\mu_2(1-p_{12}p_{21})}$, $\rho_3 = \frac{\lambda_1^{'}}{\mu_1^{'}}, \rho_4 = \frac{\lambda_2^{'}}{\mu_2^{'}},$

$\rho_5 = \frac{\lambda_1^{'} + \lambda_2^{'}}{\mu_3} + \frac{p_{13}(\lambda_1 + \lambda_2 p_{21}) + p_{23}(\lambda_2 + \lambda_1 p_{12})}{\mu_2(1-p_{12}p_{21})}$ and

Expected waiting time = $E(w) = \frac{L}{\lambda}$, where $\lambda = \lambda_1 + \lambda_2 + \lambda_1^{'} + \lambda_2^{'}.$

The model finds its applications in manufacturing or assembling line process in which units processed through a series of stations, each performing a given task. Practical situation can be observed in a registration process (vehicle registration) where the registrants have to visit a series of desks (advisor, department chairperson, cashier, etc.), or in a clinical physical test procedure where the patients have to pass through a series of stages (lab tests, electrocardiogram, chest X-ray etc.). The customers or items after getting service at stage S_{11} may join the service S_{12} or may directly avail the service through server S_3. Similarly, the customers or items after getting service at stage S_{12} may join the service S_{11} or may directly avail the service through server S_3. The customers or items after getting service at parallel servers S_{21} or S_{22} will avail the service through server S_3.

3. SOLUTION METHODOLOGY

In classical queuing theory, arrival rates and service times are required to follow certain probability distribution. In the present paper, we study the proposed queue model in possiblistic / fuzzy environment.

The system data which are gathered from the real world problems always has a sort of ambiguity. The “fuzzy set” is a tool to consider these ambiguities. On the other hand, to determine the parameters of the model in the real world, generally, the expert ideas or sampling data can be used. It can be claimed that there is a sort of ambiguity in the both mentioned methods. In the first case, the ambiguity is due to the lack of the preciseness and enough specialties. In the second case, the ambiguity is due to the lack of enough sampling data. Because of these ambiguities, in this paper, it is preferred to use the fuzzy parameters instead of the certain ones for the suggested queue model. To estimate a parameter as a fuzzy number and to change the input data (Arrival rate, Service rate) into the fuzzy numbers, the method of Buckley and Qu method [1990] is used.

Since the arrival rate ($\tilde{\lambda}$), service rate ($\tilde{\mu}$) are not known precisely, therefore, we use triangular fuzzy numbers to represent them.

If $\tilde{A}=(a_1,a_2,a_3)$ be a triangular fuzzy numbers, then by using α- cut approach, A^{α} can be derived as follows:

$\forall\ \alpha\in[0,1]$, we have

$\frac{a_1^{(\alpha)}-a_1}{a_2-a_1}=\alpha;\ \frac{a_3-a_3^{(\alpha)}}{a_3-a_2}=\alpha$, we get

$a_1^{(\alpha)}=(a_2-a_1)\alpha+a_1;\ a_3^{(\alpha)}=a_3-(a_3-a_1)\alpha$.

Thus, $A^{\alpha}=\left[a_1^{(\alpha)},a_3^{(\alpha)}\right]=\left[(a_2-a_1)\alpha+a_1,\ a_3-(a_3-a_1)\alpha\ \right]$.

Similarly, if $B=(b_1,b_2,b_3)$, then $B^{\alpha}=\left[b_1^{(\alpha)},b_3^{(\alpha)}\right]=\left[(b_2-b_1)\alpha+b_1,\ \mathrm{b}_3-(b_3-b_1)\alpha\ \right]$.

The basic arithmetic operations with α- cut are as follows:

(i) $A^{\alpha}+B^{\alpha}=\left[a_1^{(\alpha)},a_3^{(\alpha)}\right]+\left[b_1^{(\alpha)},b_3^{(\alpha)}\right]=\left[a_1^{(\alpha)}+b_1^{(\alpha)},a_3^{(\alpha)}+b_3^{(\alpha)}\right]$

(ii) $A^{\alpha}-B^{\alpha}=\left[a_1^{(\alpha)},a_3^{(\alpha)}\right]-\left[b_1^{(\alpha)},b_3^{(\alpha)}\right]=\left[a_1^{(\alpha)}-b_3^{(\alpha)},a_3^{(\alpha)}-b_1^{(\alpha)}\right]$

(iii) $A^{\alpha}.B^{\alpha}=\left[a_1^{(\alpha)},a_3^{(\alpha)}\right].\left[b_1^{(\alpha)},b_3^{(\alpha)}\right]=\left[a_1^{(\alpha)}.b_1^{(\alpha)},a_3^{(\alpha)}.b_3^{(\alpha)}\right]$

(iv) $\frac{A^{\alpha}}{B^{\alpha}}=\frac{\left[a_1^{(\alpha)},a_3^{(\alpha)}\right]}{\left[b_1^{(\alpha)},b_3^{(\alpha)}\right]}=\left[\frac{a_1^{(\alpha)}}{b_3^{(\alpha)}},\frac{a_3^{(\alpha)}}{b_1^{(\alpha)}}\right]$

Let $\tilde{\lambda}=(\lambda_1,\lambda_2,\lambda_3),\ \tilde{\mu}=(\mu_1,\mu_2,\mu_3)$,where $\lambda_1<\lambda_2<\lambda_3,\ \mu_1<\mu_2<\mu_3$ based on subjective judgment. The membership of $\eta_{\tilde{\lambda}}\left(\tilde{\lambda}\right)$ and $\eta_{\tilde{\mu}}\left(\tilde{\mu}\right)$ are defined as follows:

$$\eta_{\tilde{\lambda}}\left(\tilde{\lambda}\right)=\begin{cases}0 & if\ \lambda<\lambda_1\\ \frac{\lambda-\lambda_1}{\lambda_2-\lambda_1} & if\ \lambda_1\le\lambda\le\lambda_2\\ \frac{\lambda_3-\lambda}{\lambda_3-\lambda_2} & if\ \lambda_2\le\lambda\le\lambda_3\\ 0 & if\ \lambda\ge\lambda_3\end{cases}$$

$$\eta_{\tilde{\mu}}\left(\tilde{\mu}\right)=\begin{cases}0 & if\ \mu<\mu_1\\ \frac{\mu-\mu_1}{\mu_2-\mu_1} & if\ \mu_1\le\mu\le\mu_2\\ \frac{\mu_3-\mu}{\mu_3-\mu_2} & if\ \mu_2\le\mu\le\mu_3\\ 0 & if\ \mu\ge\mu_3\end{cases}$$

Using the concept of α - cut method, the following set of equations have been obtained.

$$\lambda^{\alpha} = \left[\alpha(\lambda_2 - \lambda_1) + \lambda_1, \lambda_3 - \alpha(\lambda_3 - \lambda_2)\right]$$
$$\mu^{\alpha} = \left[\alpha(\mu_2 - \mu_1) + \mu_1, \mu_3 - \alpha(\mu_3 - \mu_2)\right]$$
$$p^{\alpha} = \left[\alpha(p_2 - p_1) + p_1, p_3 - \alpha(p_3 - p_2)\right]$$

Let the fuzzy arrival rates are $\tilde{\lambda}_1$, $\tilde{\lambda}_2$; fuzzy service rates are $\tilde{\mu}_1, \tilde{\mu}_2, \tilde{\mu}_3$ and the various fuzzy possibilities $\tilde{p}_{12}, \tilde{p}_{13}, \tilde{p}_{21}, \tilde{p}_{23}$ are defined as follows:

$\tilde{\lambda}_i = \left(\lambda_i^1, \lambda_i^2, \lambda_i^3\right)$, $\tilde{\mu}_i = \left(\mu_i^1, \mu_i^2, \mu_i^3\right)$ and $\tilde{p}_{ij} = \left(p_{ij}^1, p_{ij}^2, p_{ij}^3\right)$ for various values of i & j.

Therefore, $\lambda_i^{\alpha} = \left[\alpha\left(\lambda_i^2 - \lambda_i^1\right) + \lambda_i^1, \lambda_i^3 - \alpha\left(\lambda_i^3 - \lambda_i^2\right)\right]$

$$\mu_i^{\alpha} = \left[\alpha\left(\mu_i^2 - \mu_i^1\right) + \mu_i^1, \mu_i^3 - \alpha\left(\mu_i^3 - \mu_i^2\right)\right]$$

$$p_{ij}^{\alpha} = \left[\alpha\left(p_{ij}^2 - p_{ij}^1\right) + p_{ij}^1, p_{ij}^3 - \alpha\left(p_{ij}^3 - p_{ij}^2\right)\right]$$

Since , $\rho_1 = \dfrac{\lambda_1 + \lambda_2 p_{21}}{\mu_1(1 - p_{12}p_{21})}$, therefore $\rho_1^{\alpha} = \dfrac{\lambda_1^{\alpha} + \lambda_2^{\alpha} p_{21}^{\alpha}}{\mu_1^{\alpha}\left(1 - p_{12}^{\alpha} p_{21}^{\alpha}\right)}$

$$^{\alpha}\lambda_1 + {}^{\alpha}\lambda_2 . {}^{\alpha}p_{21} = \left\lfloor \left(\alpha\left(\lambda_1^2 - \lambda_1^1\right) + \lambda_1^1\right) + \left(\left(\alpha\left(\lambda_2^2 - \lambda_2^1\right) + \lambda_2^1\right)\left(\left(\alpha\left(p_{21}^2 - p_{21}^1\right) + p_{21}^1\right)\right)\right), \left(\lambda_1^3 - \alpha\left(\lambda_1^3 - \lambda_1^2\right)\right) + \left(\left(\lambda_2^3 - \alpha\left(\lambda_2^3 - \lambda_2^2\right)\right)\left(\left(p_{21}^3 - \alpha\left(p_{21}^3 - p_{21}^2\right)\right)\right)\right) \right\rfloor$$

$$^{\alpha}\mu_1\left(1 - {}^{\alpha}p_{12}\,{}^{\alpha}p_{21}\right) = \left\lfloor \begin{array}{l} \left(\alpha\left(\mu_1^2 - \mu_1^1\right) + \mu_1^1\right)\left(1 - \left(\alpha\left(p_{12}^2 - p_{12}^1\right) + p_{12}^1\right)\left(\alpha\left(p_{21}^2 - p_{21}^1\right) + p_{21}^1\right)\right), \\ \left(\mu_1^3 - \alpha\left(\mu_1^3 - \mu_1^2\right)\right)\left(1 - \left(p_{12}^3 - \alpha\left(p_{12}^3 - p_{12}^2\right)\right)\left(p_{21}^3 - \alpha\left(p_{21}^3 - p_{21}^2\right)\right)\right) \end{array} \right\rfloor$$

$$\frac{1}{^{\alpha}\mu_1\left(1 - {}^{\alpha}p_{12}\,{}^{\alpha}p_{21}\right)} = \left\lfloor \frac{1}{\left(\mu_1^3 - \alpha\left(\mu_1^3 - \mu_1^2\right)\right)\left(1 - \left(p_{12}^3 - \alpha\left(p_{12}^3 - p_{12}^2\right)\right)\left(p_{21}^3 - \alpha\left(p_{21}^3 - p_{21}^2\right)\right)\right)}, \frac{1}{\left(\alpha\left(\mu_1^2 - \mu_1^1\right) + \mu_1^1\right)\left(1 - \left(\alpha\left(p_{12}^2 - p_{12}^1\right) + p_{12}^1\right)\left(\alpha\left(p_{21}^2 - p_{21}^1\right) + p_{21}^1\right)\right)} \right\rfloor$$

Therefore, $^{\alpha}\rho_1 = \dfrac{^{\alpha}\lambda_1 + {}^{\alpha}\lambda_2\,{}^{\alpha}p_{21}}{^{\alpha}\mu_1\left(1 - {}^{\alpha}p_{12}\,{}^{\alpha}p_{21}\right)}$

$$=\left[\frac{\left(\alpha\left(\lambda_1^2-\lambda_1^1\right)+\lambda_1^1\right)+\begin{pmatrix}\left(\alpha\left(\lambda_2^2-\lambda_2^1\right)+\lambda_2^1\right)\\ \left(\left(\alpha\left(p_{21}^2-p_{21}^1\right)+p_{21}^1\right)\right)\end{pmatrix}}{\left(\mu_1^3-\alpha\left(\mu_1^3-\mu_1^2\right)\right)\begin{pmatrix}1-\left(p_{12}^3-\alpha\left(p_{12}^3-p_{12}^2\right)\right)\\ \left(p_{21}^3-\alpha\left(p_{21}^3-p_{21}^2\right)\right)\end{pmatrix}},\frac{\left(\lambda_1^3-\alpha\left(\lambda_1^3-\lambda_1^2\right)\right)+\begin{pmatrix}\left(\lambda_2^3-\alpha\left(\lambda_2^3-\lambda_2^2\right)\right)\\ \left(\left(p_{21}^3-\alpha\left(p_{21}^3-p_{21}^2\right)\right)\right)\end{pmatrix}}{\left(\alpha\left(\mu_1^2-\mu_1^1\right)+\mu_1^1\right)\begin{pmatrix}1-\left(\alpha\left(p_{12}^2-p_{12}^1\right)+p_{12}^1\right)\\ \left(\alpha\left(p_{21}^2-p_{21}^1\right)+p_{21}^1\right)\end{pmatrix}}\right]$$

Therefore, ${}^{\alpha}L_1=\dfrac{{}^{\alpha}\rho_1}{1-{}^{\alpha}\rho_1}$

$$=\left[\frac{\dfrac{\left(\alpha\left(\lambda_1^2-\lambda_1^1\right)+\lambda_1^1\right)+\begin{pmatrix}\left(\alpha\left(\lambda_2^2-\lambda_2^1\right)+\lambda_2^1\right)\\ \left(\left(\alpha\left(p_{21}^2-p_{21}^1\right)+p_{21}^1\right)\right)\end{pmatrix}}{\left(\mu_1^3-\alpha\left(\mu_1^3-\mu_1^2\right)\right)\begin{pmatrix}1-\left(p_{12}^3-\alpha\left(p_{12}^3-p_{12}^2\right)\right)\\ \left(p_{21}^3-\alpha\left(p_{21}^3-p_{21}^2\right)\right)\end{pmatrix}}}{1-\dfrac{\left(\lambda_1^3-\alpha\left(\lambda_1^3-\lambda_1^2\right)\right)+\begin{pmatrix}\left(\lambda_2^3-\alpha\left(\lambda_2^3-\lambda_2^2\right)\right)\\ \left(\left(p_{21}^3-\alpha\left(p_{21}^3-p_{21}^2\right)\right)\right)\end{pmatrix}}{\left(\alpha\left(\mu_1^2-\mu_1^1\right)+\mu_1^1\right)\begin{pmatrix}1-\left(\alpha\left(p_{12}^2-p_{12}^1\right)+p_{12}^1\right)\\ \left(\alpha\left(p_{21}^2-p_{21}^1\right)+p_{21}^1\right)\end{pmatrix}}},\frac{\dfrac{\left(\lambda_1^3-\alpha\left(\lambda_1^3-\lambda_1^2\right)\right)+\begin{pmatrix}\left(\lambda_2^3-\alpha\left(\lambda_2^3-\lambda_2^2\right)\right)\\ \left(\left(p_{21}^3-\alpha\left(p_{21}^3-p_{21}^2\right)\right)\right)\end{pmatrix}}{\left(\alpha\left(\mu_1^2-\mu_1^1\right)+\mu_1^1\right)\begin{pmatrix}1-\left(\alpha\left(p_{12}^2-p_{12}^1\right)+p_{12}^1\right)\\ \left(\alpha\left(p_{21}^2-p_{21}^1\right)+p_{21}^1\right)\end{pmatrix}}}{1-\dfrac{\left(\alpha\left(\lambda_1^2-\lambda_1^1\right)+\lambda_1^1\right)+\begin{pmatrix}\left(\alpha\left(\lambda_2^2-\lambda_2^1\right)+\lambda_2^1\right)\\ \left(\left(\alpha\left(p_{21}^2-p_{21}^1\right)+p_{21}^1\right)\right)\end{pmatrix}}{\left(\mu_1^3-\alpha\left(\mu_1^3-\mu_1^2\right)\right)\begin{pmatrix}1-\left(p_{12}^3-\alpha\left(p_{12}^3-p_{12}^2\right)\right)\\ \left(p_{21}^3-\alpha\left(p_{21}^3-p_{21}^2\right)\right)\end{pmatrix}}}\right]$$

Substituting α = 0 and α = 1, an approximate triangular fuzzy number, $\tilde{L}_1$ is obtained as

$$L_1=\left(\frac{\dfrac{\lambda_1^1+\lambda_2^1p_{21}^1}{\left(1-p_{12}^3p_{21}^3\right)\mu_1^3}}{1-\dfrac{\lambda_1^3+\lambda_2^3p_{21}^3}{\left(1-p_{12}^1p_{21}^1\right)\mu_1^1}},\frac{\dfrac{\lambda_1^2+\lambda_2^2p_{21}^2}{\left(1-p_{12}^2p_{21}^2\right)\mu_1^2}}{1-\dfrac{\lambda_1^2+\lambda_2^2p_{21}^2}{\left(1-p_{12}^2p_{21}^2\right)\mu_1^2}},\frac{\dfrac{\lambda_1^3+\lambda_2^3p_{21}^3}{\left(1-p_{12}^1p_{21}^1\right)\mu_1^1}}{1-\dfrac{\lambda_1^1+\lambda_2^1p_{21}^1}{\left(1-p_{12}^3p_{21}^3\right)\mu_1^3}}\right)=\left(L_1^1,L_1^2,L_1^3\right);\text{ where}$$

$$L_1^1=\frac{\dfrac{\lambda_1^1+\lambda_2^1p_{21}^1}{\left(1-p_{12}^3p_{21}^3\right)\mu_1^3}}{1-\dfrac{\lambda_1^3+\lambda_2^3p_{21}^3}{\left(1-p_{12}^1p_{21}^1\right)\mu_1^1}},\quad L_1^2=\frac{\dfrac{\lambda_1^2+\lambda_2^2p_{21}^2}{\left(1-p_{12}^2p_{21}^2\right)\mu_1^2}}{1-\dfrac{\lambda_1^2+\lambda_2^2p_{21}^2}{\left(1-p_{12}^2p_{21}^2\right)\mu_1^2}}\text{ and }L_1^3=\frac{\dfrac{\lambda_1^3+\lambda_2^3p_{21}^3}{\left(1-p_{12}^1p_{21}^1\right)\mu_1^1}}{1-\dfrac{\lambda_1^1+\lambda_2^1p_{21}^1}{\left(1-p_{12}^3p_{21}^3\right)\mu_1^3}}$$

Similarly, $L_2=\dfrac{\rho_2}{1-\rho_2}=\left(L_2^1,L_2^2,L_2^3\right)$; where

$$L_2^1=\frac{\dfrac{\lambda_2^1+\lambda_1^2p_{12}^1}{\left(1-p_{12}^3p_{21}^3\right)\mu_2^3}}{1-\dfrac{\lambda_2^3+\lambda_1^3p_{12}^3}{\left(1-p_{12}^1p_{21}^1\right)\mu_2^1}},\quad L_2^2=\frac{\dfrac{\lambda_2^2+\lambda_1^2p_{12}^2}{\left(1-p_{12}^2p_{21}^2\right)\mu_2^2}}{1-\dfrac{\lambda_2^2+\lambda_1^2p_{12}^2}{\left(1-p_{12}^2p_{21}^2\right)\mu_2^2}}\text{ and }L_2^3=\frac{\dfrac{\lambda_2^3+\lambda_1^3p_{12}^3}{\left(1-p_{12}^1p_{21}^1\right)\mu_2^1}}{1-\dfrac{\lambda_2^1+\lambda_1^1p_{12}^1}{\left(1-p_{12}^3p_{21}^3\right)\mu_2^3}}$$

Also, $^{\alpha}\rho_3 = \dfrac{^{\alpha}\lambda_1^{`}}{^{\alpha}\mu_1^{`}}$

$$= \frac{\left[\alpha\left(\lambda_{11}^2-\lambda_{11}^1\right)+\lambda_{11}^1, \lambda_{11}^3-\alpha\left(\lambda_{11}^3-\lambda_{11}^2\right)\right]}{\left[\alpha\left(\mu_{11}^2-\mu_{11}^1\right)+\mu_{11}^1, \mu_{11}^3-\alpha\left(\mu_{11}^3-\mu_{11}^2\right)\right]}$$

$$= \left[\frac{\alpha\left(\lambda_{11}^2-\lambda_{11}^1\right)+\lambda_{11}^1}{\mu_{11}^3-\alpha\left(\mu_{11}^3-\mu_{11}^2\right)}, \frac{\lambda_{11}^3-\alpha\left(\lambda_{11}^3-\lambda_{11}^2\right)}{\alpha\left(\mu_{11}^2-\mu_{11}^1\right)+\mu_{11}^1}\right]$$

Therefore, $^{\alpha}L_3 = \dfrac{^{\alpha}\rho_3}{1-^{\alpha}\rho_3} = \left[\dfrac{\dfrac{\alpha\left(\lambda_{11}^2-\lambda_{11}^1\right)+\lambda_{11}^1}{\mu_{11}^3-\alpha\left(\mu_{11}^3-\mu_{11}^2\right)}}{1-\dfrac{\lambda_{11}^3-\alpha\left(\lambda_{11}^3-\lambda_{11}^2\right)}{\alpha\left(\mu_{11}^2-\mu_{11}^1\right)+\mu_{11}^1}}, \dfrac{\dfrac{\lambda_{11}^3-\alpha\left(\lambda_{11}^3-\lambda_{11}^2\right)}{\alpha\left(\mu_{11}^2-\mu_{11}^1\right)+\mu_{11}^1}}{1-\dfrac{\alpha\left(\lambda_{11}^2-\lambda_{11}^1\right)+\lambda_{11}^1}{\mu_{11}^3-\alpha\left(\mu_{11}^3-\mu_{11}^2\right)}}\right]$

Substituting $\alpha = 0$ and $\alpha = 1$, an approximate triangular fuzzy number, $\tilde{L}_3$ is obtained as follows:

$$L_3 = \left[\frac{\dfrac{\lambda_{11}^1}{\mu_{11}^3}}{1-\dfrac{\lambda_{11}^3}{\mu_{11}^1}}, \frac{\dfrac{\lambda_{11}^2}{\mu_{11}^2}}{1-\dfrac{\lambda_{11}^2}{\mu_{11}^2}}, \frac{\dfrac{\lambda_{11}^3}{\mu_{11}^2}}{1-\dfrac{\lambda_{11}^1}{\mu_{11}^3}}\right] = \left(L_3^1, L_3^2, L_3^3\right)$$

Similarly, $L_4 = \left[\dfrac{\dfrac{\lambda_{21}^1}{\mu_{21}^3}}{1-\dfrac{\lambda_{21}^3}{\mu_{21}^1}}, \dfrac{\dfrac{\lambda_{21}^2}{\mu_{21}^2}}{1-\dfrac{\lambda_{21}^2}{\mu_{21}^2}}, \dfrac{\dfrac{\lambda_{21}^3}{\mu_{21}^2}}{1-\dfrac{\lambda_{21}^1}{\mu_{21}^3}}\right] = \left(L_4^1, L_4^2, L_4^3\right)$

Also, $^{\alpha}\rho_5 = \dfrac{^{\alpha}\lambda_1^{'} +^{\alpha}\lambda_2^{'}}{^{\alpha}\mu_3} + \dfrac{^{\alpha}p_{13}\left(^{\alpha}\lambda_1 +^{\alpha}\lambda_2\,^{\alpha}p_{21}\right) +^{\alpha}p_{23}\left(^{\alpha}\lambda_2 +^{\alpha}\lambda_1\,^{\alpha}p_{12}\right)}{^{\alpha}\mu_2\left(1-^{\alpha}p_{12}\,^{\alpha}p_{21}\right)}$

$$= \left[\frac{\alpha\left(\lambda_{11}^2-\lambda_{11}^1\right)+\lambda_{11}^1+\alpha\left(\lambda_{21}^2-\lambda_{21}^1\right)+\lambda_{21}^1}{\mu_3^3-\alpha\left(\mu_3^3-\mu_3^2\right)}, \frac{\lambda_{11}^3-\alpha\left(\lambda_{11}^3-\lambda_{11}^2\right)+\lambda_{21}^3-\alpha\left(\lambda_{21}^3-\lambda_{21}^2\right)}{\alpha\left(\mu_3^2-\mu_3^1\right)+\mu_3^1}\right] +$$

$$\left[\frac{\begin{array}{l}\left\{\left(\alpha\left(p_{13}^2-p_{13}^1\right)+p_{13}^1\right)\left\{\alpha\left(\lambda_1^2-\lambda_1^1\right)+\lambda_1^1+\left(\alpha\left(\lambda_2^2-\lambda_2^1\right)+\lambda_2^1\right)\left(\alpha\left(p_{21}^2-p_{21}^1\right)+p_{21}^1\right)\right\}\right\} \\ +\left\{\left(\alpha\left(p_{23}^2-p_{23}^1\right)+p_{23}^1\right)\left\{\alpha\left(\lambda_2^2-\lambda_2^1\right)+\lambda_2^1+\left(\alpha\left(\lambda_1^2-\lambda_1^1\right)+\lambda_1^1\right)\left(\alpha\left(p_{12}^2-p_{12}^1\right)+p_{12}^1\right)\right\}\right\}\end{array}}{\left(\mu_2^3-\alpha\left(\mu_2^3-\mu_2^2\right)\right)\begin{pmatrix}1-\left(p_{12}^3-\alpha\left(p_{12}^3-p_{12}^2\right)\right) \\ \left(p_{21}^3-\alpha\left(p_{21}^3-p_{21}^2\right)\right)\end{pmatrix}}, \frac{\begin{array}{l}\left\{\left(p_{13}^3-\alpha\left(p_{13}^3-p_{13}^2\right)\right)\left\{\lambda_1^3-\alpha\left(\lambda_1^3-\lambda_1^2\right)+\left(\lambda_2^3-\alpha\left(\lambda_2^3-\lambda_2^2\right)\right)\left(p_{21}^3-\alpha\left(p_{21}^3-p_{21}^2\right)\right)\right\}\right\} \\ +\left\{\left(p_{23}^3-\alpha\left(p_{23}^3-p_{23}^2\right)\right)\left\{\lambda_2^3-\alpha\left(\lambda_2^3-\lambda_2^2\right)+\left(\lambda_1^3-\alpha\left(\lambda_1^3-\lambda_1^2\right)\right)\left(p_{12}^3-\alpha\left(p_{12}^3-p_{12}^2\right)\right)\right\}\right\}\end{array}}{\left(\alpha\left(\mu_2^2-\mu_2^1\right)+\mu_2^1\right)\begin{pmatrix}1-\left(\alpha\left(p_{12}^2-p_{12}^1\right)+p_{12}^1\right) \\ \left(\alpha\left(p_{21}^2-p_{21}^1\right)+p_{21}^1\right)\end{pmatrix}}\right]$$

Therefore, $^{\alpha}L_5 = \dfrac{^{\alpha}\rho_5}{1-^{\alpha}\rho_5}$

Substituting $\alpha = 0$ and $\alpha = 1$, an approximate triangular fuzzy number, $\tilde{L}_5$ is given as

$$L_5 = \left[\frac{\frac{\lambda_{11}^1+\lambda_{21}^1}{\mu_3^2} + \frac{p_{13}^1\left\{\lambda_1^1+\lambda_2^1 p_{21}^1\right\}+p_{23}^1\left\{\lambda_2^1+\lambda_1^1 p_{12}^1\right\}}{\mu_3^2\left(1-p_{12}^3 p_{21}^3\right)}}{1-\frac{\lambda_{11}^3+\lambda_{21}^3}{\mu_3^1} + \frac{p_{13}^3\left\{\lambda_1^3+\lambda_2^3 p_{21}^3\right\}+p_{23}^3\left\{\lambda_2^3+\lambda_1^3 p_{12}^3\right\}}{\mu_2^1\left(1-p_{12}^1 p_{21}^1\right)}}, \frac{\frac{\lambda_{11}^2+\lambda_{21}^2}{\mu_3^3} + \frac{p_{13}^2\left\{\lambda_1^2+\lambda_2^2 p_{21}^1\right\}+p_{23}^2\left\{\lambda_2^2+\lambda_1^2 p_{12}^2\right\}}{\mu_2^2\left(1-p_{12}^2 p_{21}^2\right)}}{1-\frac{\lambda_{11}^2+\lambda_{21}^2}{\mu_3^3} + \frac{p_{13}^2\left\{\lambda_1^2+\lambda_2^2 p_{21}^1\right\}+p_{23}^2\left\{\lambda_2^2+\lambda_1^2 p_{12}^2\right\}}{\mu_2^2\left(1-p_{12}^2 p_{21}^2\right)}}, \frac{\frac{\lambda_{11}^3+\lambda_{21}^3}{\mu_3^1} + \frac{p_{13}^3\left\{\lambda_1^3+\lambda_2^3 p_{21}^3\right\}+p_{23}^3\left\{\lambda_2^3+\lambda_1^3 p_{12}^3\right\}}{\mu_2^1\left(1-p_{12}^1 p_{21}^1\right)}}{1-\frac{\lambda_{11}^1+\lambda_{21}^1}{\mu_3^2} + \frac{p_{13}^1\left\{\lambda_1^1+\lambda_2^1 p_{21}^1\right\}+p_{23}^1\left\{\lambda_2^1+\lambda_1^1 p_{12}^1\right\}}{\mu_3^2\left(1-p_{12}^3 p_{21}^3\right)}} \right]$$

$$= \left(L_5^1, L_5^2, L_5^3\right)$$

Therefore, Average (mean) fuzzy queue length

$$\begin{aligned}
\tilde{L} &= \tilde{L}_1 + \tilde{L}_2 + \tilde{L}_3 + \tilde{L}_4 + \tilde{L}_5 \\
&= \left(L_1^1, L_1^2, L_1^3\right) + \left(L_2^1, L_2^2, L_2^3\right) + \left(L_3^1, L_3^2, L_3^3\right) + \left(L_4^1, L_4^2, L_4^3\right) + \left(L_5^1, L_5^2, L_5^3\right) \\
&= \left(L_1^1 + L_2^1 + L_3^1 + L_4^1 + L_5^1, L_3^2 + L_3^2 + L_3^2 + L_4^2 + L_5^2, L_1^3 + L_2^3 + L_3^3 + L_4^3 + L_5^3\right) \\
&= \left(l_1, l_2, l_3\right)
\end{aligned}$$

Mean arrival rate

$$\begin{aligned}
\tilde{\lambda} &= \tilde{\lambda}_1 + \tilde{\lambda}_2 + \tilde{\lambda}_1^{`} + \tilde{\lambda}_2^{`} \\
&= (\lambda_1^1, \lambda_1^2, \lambda_1^3) + (\lambda_2^1, \lambda_2^2, \lambda_2^3) + (\lambda_{11}^1, \lambda_{12}^2, \lambda_{13}^3) + (\lambda_{21}^1, \lambda_{22}^2, \lambda_{23}^3) \\
&= \left(\delta_1, \delta_2, \delta_3\right)
\end{aligned}$$

The fuzzy average waiting time of the customers / jobs is

$$\begin{aligned}
E\left(\tilde{W}\right) &= \frac{\tilde{L}}{\tilde{\lambda}} = \frac{\left(l_1, l_2, l_3\right)}{\left(\delta_1, \delta_2, \delta_3\right)} \\
&= \left(\frac{l_1}{\delta_3}, \frac{l_2}{\delta_2}, \frac{l_3}{\delta_1}\right) = \left(w_1, w_2, w_3\right)
\end{aligned}$$

Therefore, the membership functions for $\tilde{L}$ and $E\left(\tilde{W}\right)$ are

$$\eta_{\left(\tilde{L}\right)} = \begin{cases} 0 & if\ L < l_1 \\ \frac{L-l_1}{l_2-l_1} & if\ l_1 \le L < l_2 \\ \frac{l_3-L}{l_3-l_2} & if\ l_2 \le L < l_3 \\ 0 & if\ \mathrm{L} \ge l_3 \end{cases}$$

$$\eta_{\left(\tilde{W}\right)} = \begin{cases} 0 & if\ \mathrm{W} < w_1 \\ \dfrac{W - w_1}{w_2 - w_1} & if\ \mathrm{w}_1 \le W < w_2 \\ \dfrac{w_3 - W}{w_3 - w_2} & if\ \mathrm{w}_2 \le W < w_3 \\ 0 & if\ \mathrm{W} \ge w_3 \end{cases}$$

The system characteristics are described by membership function; it preserves the fuzziness of input information. However, the designer would prefer one crisp value for one of the system characteristics rather than fuzzy set. In order to overcome this problem we defuzzify the fuzzy values of system characteristic by using the Robust Ranking Technique. Robust Ranking technique (2011) which satisfies compensation, linearity and additive properties and provide results which are consistent with human.

If $\tilde{A} = (a_1, a_2, a_3)$ be a triangular fuzzy number, then robust ranking is defined by $R\left(\tilde{A}\right) = \int_0^1 (0.5)\left(a_\alpha^L, a_\alpha^U\right) d\alpha$, where $\left(a_\alpha^L, a_\alpha^U\right) = \left\{(a_2 - a_1)\alpha + a_1, a_3 - (a_3 - a_2)\alpha\right\}$ is the α - cut of the fuzzy number $\tilde{A} = (a_1, a_2, a_3)$.

4. NUMERICAL ILLUSTRATION

Considering sixteen customers/jobs that are processed through the network of queues with parallel and biserial servers connected to a common server as discussed in the proposed mathematical model, the number of the customers, fuzzy mean arrival rate, fuzzy mean service rate and various associated possibilities are given as in Table 1.

Table 1: Input variable of the proposed biserial queue model

	Arrival Rate	Service Rate	Possibilities
$n_1 = 5$	$\tilde{\lambda}_1 = (2,3,4)$	$\tilde{\mu}_1 = (10,11,12)$	$\tilde{p}_{12} = (0.4, 0.6, 0.7)$
$n_2 = 4$	$\tilde{\lambda}_2 = (5,6,7)$	$\tilde{\mu}_2 = (12,13,17)$	$\tilde{p}_{13} = (0.4, 0.3, 0.2)$
$n_3 = 4$	$\tilde{\lambda}_3 = (3,4,5)$	$\tilde{\mu}_3 = (12,14,16)$	$\tilde{p}_{21} = (0.3, 0.5, 0.6)$
$n_4 = 3$	$\tilde{\lambda}_3 = (2,4,5)$	$\tilde{\mu}_4 = (6,7,8)$	$\tilde{p}_{23} = (0.7, 0.5, 0.4)$
$n_5 = 16$		$\tilde{\mu}_5 = (12,15,16)$	

Our aim is to find the expected waiting time and average queue length of customers/jobs.

Here, we have

$\tilde{L}_1 = (1.6390, 3.5289, 1.5471); \tilde{L}_2 = (8.7381, 6.0021, 2.5); \tilde{L}_3 = (0.3214, 0.399, 0.3809);$

$\tilde{L}_4 = (1.4997, 2.0003, 0.9523); \tilde{L}_5 = (13.8094, 19.8768, 34.226)$

Therefore, mean (average) queue length of customers

$\tilde{L} = \tilde{L}_1 + \tilde{L}_2 + \tilde{L}_3 + \tilde{L}_4 + \tilde{L}_5 = (26.0076, 31.808, 39.6063) = (l_1, l_2, l_3)$

Therefore, the expected waiting time of the customers is $E\left(\tilde{w}\right) = (1.238, 1.8710, 3.3005)$.

Now, on using the Robust's Ranking Techniques [2011], the crisp value for mean queue length of customers $R\left(\tilde{L}\right) = 32.80695$ and the crisp value for the expected waiting time is $R\left(\tilde{w}\right) = 2.26945$.

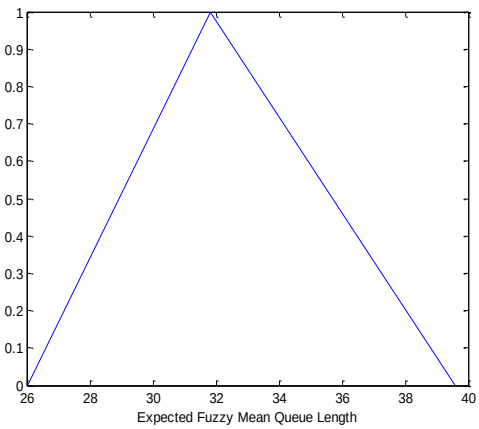

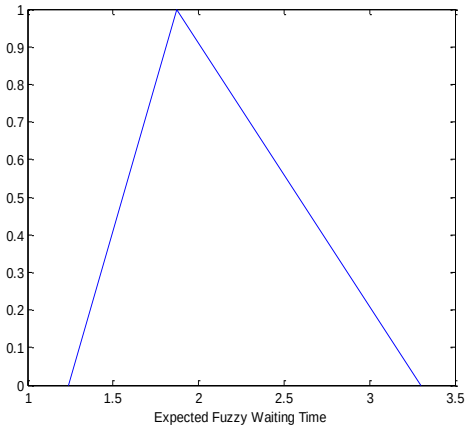

The mean queue length of customers (jobs) $R\left(\tilde{L}\right)$ in the system falls between 26.0076 and 39.6063. It indicates that the mean queue length of customers in the system will never fall below 26.0076 or exceed 39.6063. The most possible mean queue length of customers (jobs) is 31.808.

Similarly, it indicates that the support of $R\left(\tilde{W}\right)$ ranges from 1.2384 to 3.3005, i.e. the expected waiting time is fuzzy, it is impossible for its values to fall below 1.2384 or exceed 3.3005 and the most possible value for the expected waiting time in the system is 1.8710.

5. CONCLUSION

In this paper, the fuzzy analysis of synergistic collaboration of biserial and parallel servers with a common server has been conducted. Considering arrival rate, service rate are fuzzy, the expected waiting time and mean queue length of customers have been computed using fuzzy arithmetic operations. In the literature, the various system characteristics are assumed to be exact, but in real practical life the input information are almost uncertain, imprecise, and incomplete. The proposed fuzzy queue model is more suitable for designer and practitioner as it deals with imprecise values. Fuzzy triangular membership function, α-cut approach and fuzzy arithmetic operations are used to obtain system characteristic membership function. The study may further be extended by introducing more parallel, biserial servers and by introducing concept of linkage network of system of parallel machines with the proposed queue model in fuzzy environment.

REFERENCES

[1] Buckley, J. J. 1990. Elementary queuing theory based on possibility theory. Fuzzy Sets and Systems, 37, 43-52.

[2] Buckley, J. J. , and Qu, Y. 1990. On using cuts to evaluate fuzzy equations. Fuzzy Sets and Systems, 38, 309-312.

[3] Gupta, D., Singh, T.P. and Kumar, R. 2007. Analysis of a network queue model comprised of biserial and parallel channels linked to a common server, Ultra Science, 19(2)M, 407-418.

[4] Kao, C. , Li, C. , and Chen, S. 1999. Parametric programming to the analysis of fuzzy queues. Fuzzy Sets and Systems, 107, 93-100.

[5] Kumar, V. , Singh, T. P. , and Kumar, R. 2006. Steady state behaviour of a queue model comprised of two subsystems with biserial channels linked with a common channel. Ref Des Era JSM, 1(2), 135-152.

[6] Li, R. J. , and Lee, E. S. 1989. Analysis of fuzzy queues. Computers and Mathematics with Applications, 17(7), 1143-1147.

[7] Little John, D. C. 1965. A proof of queuing formula: . Operation Research, 13, 400-412.

[8] Maggu, P. L. 1970. Phase type service queues with two servers in biseries. Journal of Operational Research Society of Japan, 13(1), 1-6.

[9] Nagoorgani, A. , and Retha, W. 2006. Fuzzy tandem queues. Acta Cienicia Indica. XXXII(M), 257-263.

[10] Prade, H. M. 1980. An outline of fuzzy or possiblistic models for queuing systems, in: P. P Wang, S. K. Chang (Eds.), Fuzzy Sets: Theory and Applications to Policy Analysis and Information Systems. Plenum Press, NewYork, 147-153.

[11] Pourdarvish, A, and Jamshidi, Y. 2008. Application of fuzzy set in transient behaviour of queuing system. JISSOR, XXIX.

[12] Robert, L. , and Ritha, W. 2010. Machine interference problem with fuzzy environment. I. J. Contemporary Math. Science, 5(39), 1905-1912.

[13] Seema, Gupta, D. and Sharma, S. 2013. Analysis of biserial servers linked to a common server in fuzzy environment, International Journal of Computer Applications, 68(6), 26-32.

[14] Singh, M. 1979. On certain queuing networks of serial/bi-serial channels. Ph. D Thesis, Meerut University, Merrut.

[15] Singh, T. P. 1986. On some networks of queuing and scheduling system. Ph. D. Thesis, Garhwal University, Srinagar, Garhwal.

[16] Singh, T. P. , Kumar, V. , and Kumar, R. 2005. On transient behaviour of queuing network with parallel biserial queues. JMASS, 1(2), 68-75.

[17] Singh, T. P. , and Pardeep 2009. Serail queue model with blocking under fuzzy environment. JMASS, 5(2), 86-94.

[18] Stanford, R. E. 1982. The set of limiting distributions for a Markov chain with fuzzy transition probabilities. Fuzzy Sets and Systems, 7, 71-78.

[19] Yager, R. R. 1981. A procedure for ordering fuzzy subsets of the unit interval, Inform. Sci. 24, 143-161.

[20] Yan, D. and Ng, W. 2011. Robust ranking of uncertain data, Lecture notes in Computer Science, 6587(2011), 254-268.

[21] Zadeh, L. A. 1978. Fuzzy sets as a basis for a theory of possibility. Fuzzy Sets and Systems, 1, 3-28.

[22] Zimmermann, H. J. 1995. Fuzzy set theory and its applications, second ed. , Kluwer Academic Boston.